Diagram : SUB ERD CLASS SUBCLASS
Modified : 21 February 2000 09:10:13
Application System : OKC 115
Connect String : case115

ORACLE®

Oracle Contracts Core (OKC)

Copyright © 1997,1998,1999 Oracle Corporation, Redwood Shores, California
All rights reserved. Printed in the U.S.A.
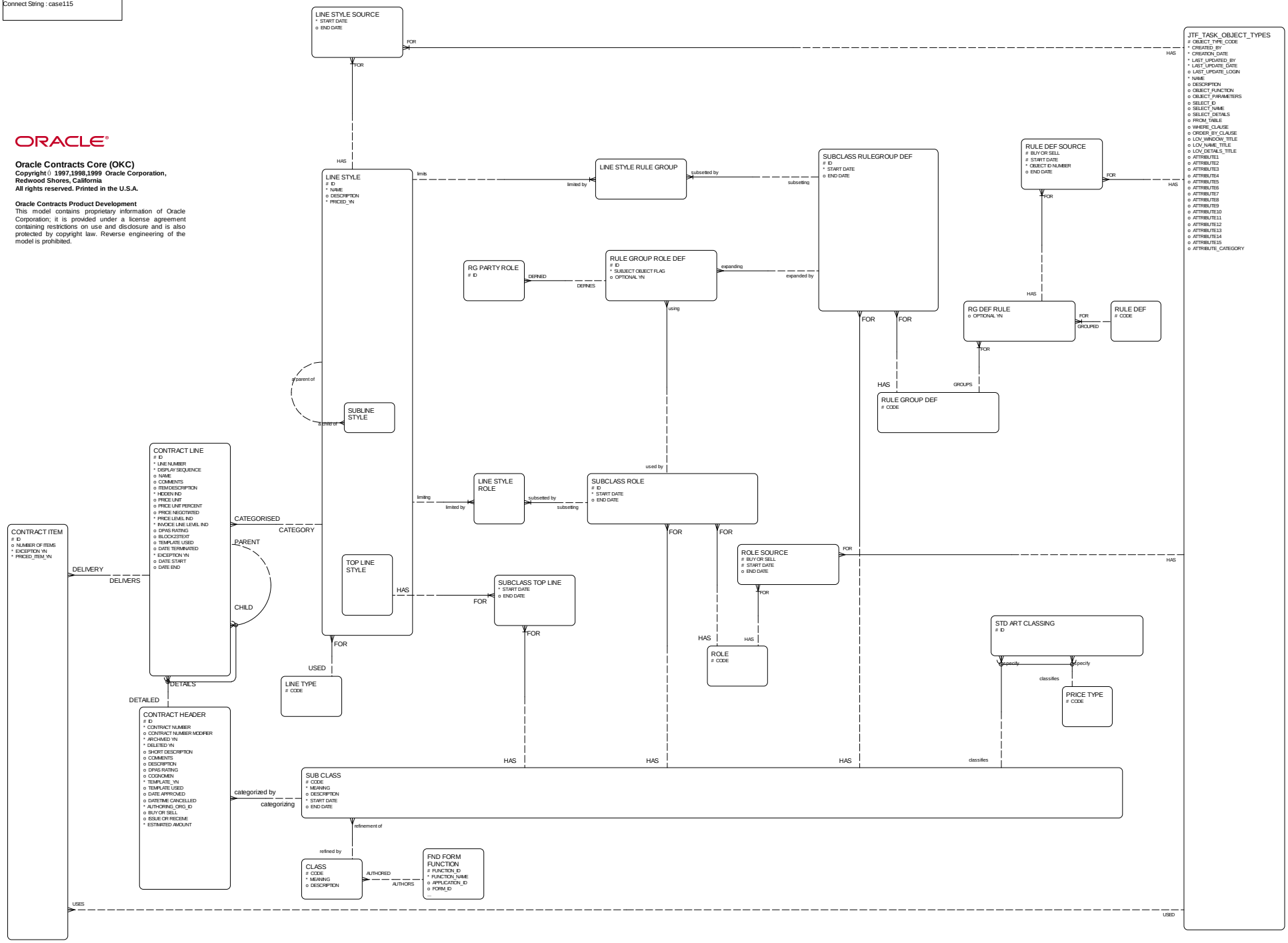
Oracle Contracts Product Development
This model contains proprietary information of Oracle Corporation; it is provided under a license agreement containing restrictions on use and disclosure and is also protected by copyright law. Reverse engineering of the model is prohibited.