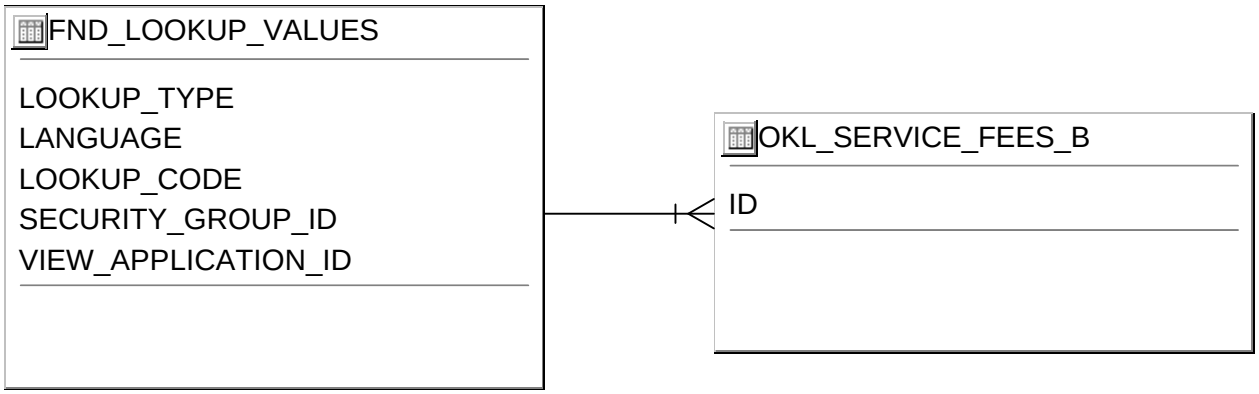
FND_LOOKUP_VALUES
LOOKUP_TYPE
LANGUAGE
LOOKUP_CODE
SECURITY_GROUP_ID
VIEW_APPLICATION_ID
OKL_SERVICE_FEES_B
ID

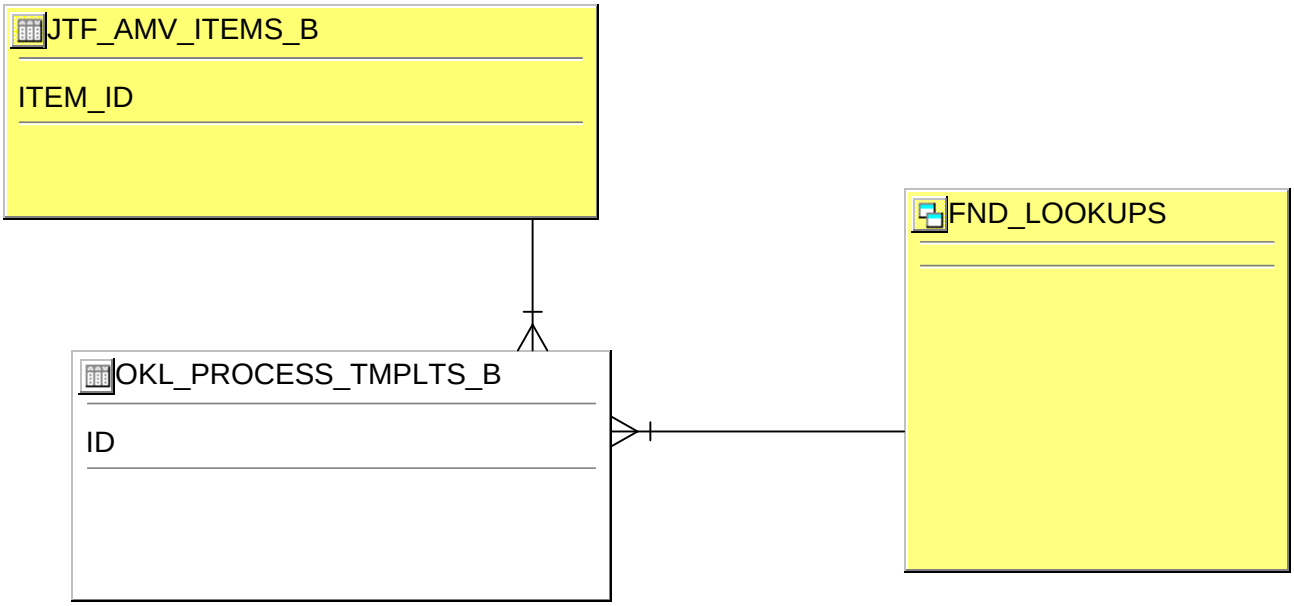
JTF_AMV_ITEMS_B
ITEM_ID
FND_LOOKUPS
OKL_PROCESS_TMPLTS_B
ID